CSCLED

Order Code # JL-207C

Photocell (120-277V)

with Microprocessor Circuits

Ideal for automatically controlling the outdoor lighting in accordance with the ambient natural lighting level, and midnight sleeping timer settings

Optional Photocell Receptacle (JL-200) sold separately

TECHNICAL DATA

TECHNICAL PARAMETERS

Rated Voltage	120-277V
Applicable Voltage	105-305V
Rated Frequency	50/60Hz
Rated Loading	1000W Tungsten 1800V Ballast
Power consumption	0.5W [STD] / 0.9W [HP]
Operating temp	-40°C to 70°C
Rating	IP67
Approx. Weight	110g [STD] / 125g [HP]
On/Off Level	61x on 501x off

DIMENSIONS

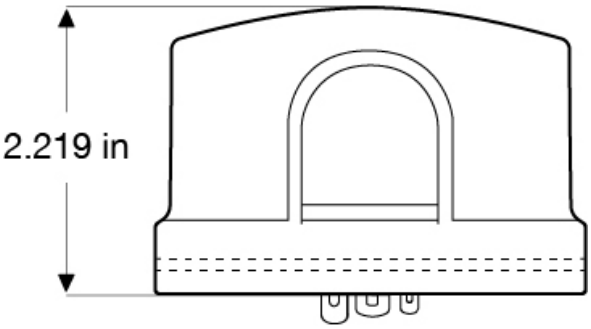

INSTALLATION

Disconnect power; wire the receptacle according to the diagram in right hand. Push the photocontroller on and twist it clockwise to lock it into the receptacle.
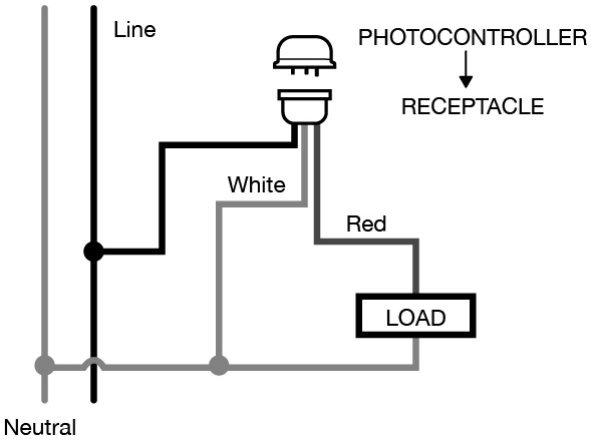
Install the photocontroller with the Photocell facing the NORTH direction as indicated on the top of the photocontroller. Adjust the receptacle position if necessary.